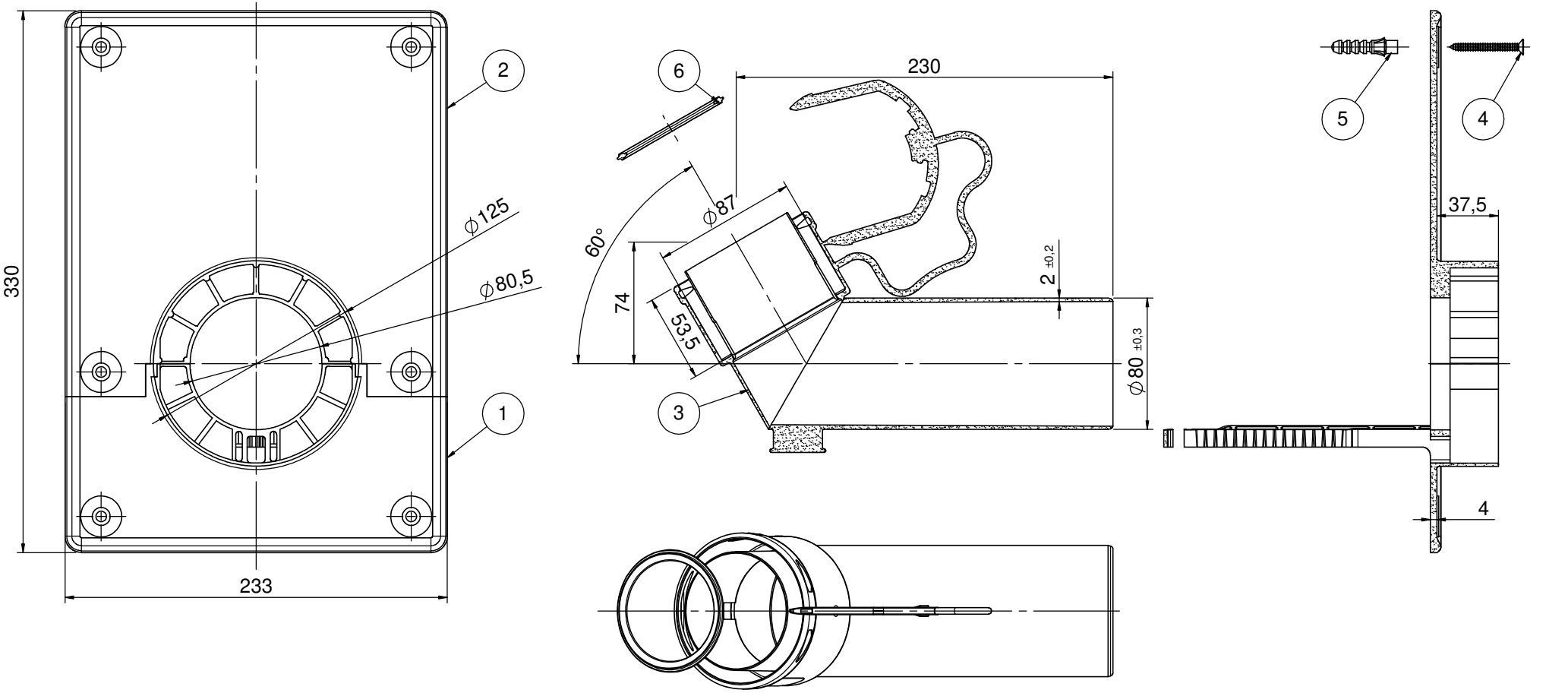

Pos.	DRAWING/CODE	DESCRIPTION	Qty	MATERIAL
6	GGN08011	Ø80 LIP SEAL	1	PEROXIDIC EPDM
5	TSFE0840	PLUG S8x40	6	NYLON
4	VTSZ4845	SCREW Ø4,8x45	6	ZINC STEEL
3	PB1511000	Ø80 ADAPTOR M-F	1	-
2	PB1520B00	PLATE FOR CHIMNEY Ø80/125	1	POLYPROPYLENE
1	PB1520A00	PLATE FOR CHIMNEY Ø80/125	1	POLYPROPYLENE

LD hvac
Info@ld-hvac.com

REV.	DESCRIPTION	DATE

NOTES AND REVISIONS

GENERAL TOLERANCES

Precision Level c/L

ISO 2768

MATERIAL (See Table)

ITEM WALL PLATE Ø80 WITH FLOW SUPPORT BEND

ISSUED AND VERIFIED by: MARZATICO Lorenzo

APPROVED by: CAMIA Daniele

COLOUR NATURAL

IN PLACE OF DRAWING: PTA8543

CUSTOMER CODE CXZBBSMP08

204997

DRAWING **A01.012.000243 .24997A**

MOULD

SCALE 1:3.5

REVISION 0

DATE: 28/06/2023

GRP00246507

LD Hvac reserves the right to modify the drawing without prior notice, and according to law it forbids any reproduction or distribution of the drawing without due authorization